WINSTAR

MICRO GRAIN CARBIDE SPOTTING DRILLS - Standard 2F

DTT-NA2

DTL-NA2

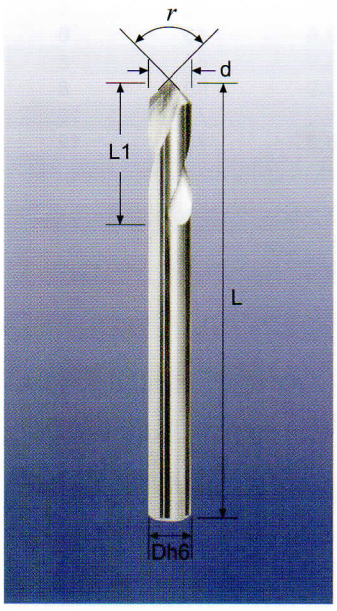

DTT-NA2

定點鑽-標準型

(r) 90 Degree Order No. 訂購編號	(r) 120 Degree Order No. 訂購編號	Dia. 刃徑 (d)	CL 刃長 (L1)	OAL 全長 (L)	Shank 柄徑 (D)
DTTNA203002	DTTNA203004	3	10	50	3
DTTNA204002	DTTNA204004	4	12	50	4
DTTNA205002	DTTNA205004	5	15	50	5
DTTNA206002	DTTNA206004	6	20	50	6
DTTNA208002	DTTNA208004	8	25	60	8
DTTNA210002	DTTNA210004	10	25	75	10
DTTNA212002	DTTNA212004	12	30	75	12
DTTNA216002	DTTNA216004	16	35	100	16

Dimension

- 90 Degree Tip Angle
- 120 Degree Tip Angle
- Uncoating

Tolerance

- d h7
- D h6

Material

- ALLOY STEELS
- STAINLESS STEELS
- CAST IRON

Recommend Cutting Condition

Table 9

MICRO GRAIN CARBIDE SPOTTING DRILLS-Long Shank 2F

DTL-NA2

定點鑽-長柄型

90 Degree Order No. 訂購編號	120 Degree Order No. 訂購編號	Dia. 刃徑 (d)	CL 刃長 (L1)	OAL 全長 (L)	Shank 柄徑 (D)
DTLNA2040002	DTLNA2040004	4	15	75	4
DTLNA2050002	DTLNA2050004	5	15	75	5
DTLNA2060002	DTLNA2060004	6	20	100	6
DTLNA2080002	DTLNA2080004	8	25	100	8
DTLNA2100002	DTLNA2100004	10	25	150	10
DTLNA2120002	DTLNA2120004	12	30	150	12
DTLNA2160002	DTLNA2160004	16	35	150	16